LTR	REVISION	DATE	BY	LTR	ALTERATION	DATE	BY
A.N	PHOTO TRACED	[illegible]					
AP	TO B/M ADDED -30(R)-43 (-34 WAS 42) WT DECREASE -34	[illegible]					

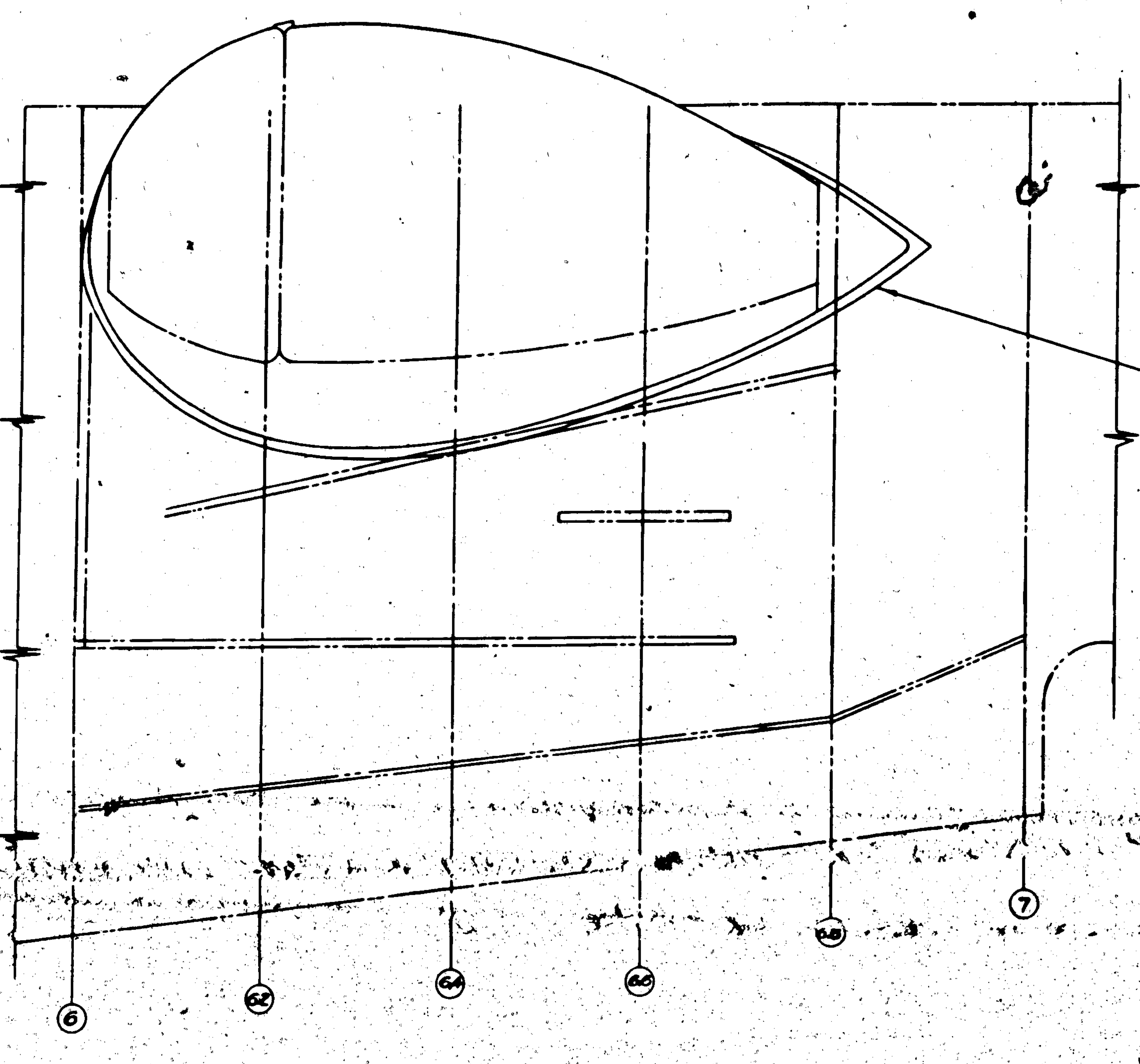

VIEW SHOWING WAIST GUN HATCH OPENING FOR -550 ASSY

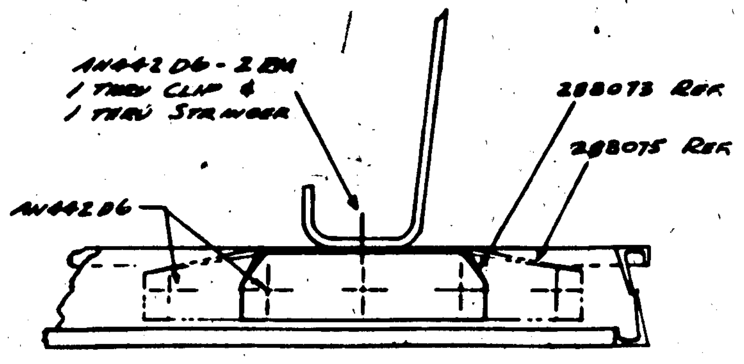

DETAIL A
SHOWING BOT. STRINGER ATT'N'T TO PRESSED B.F.'S USING CLIPS 28B073 & 28B075.

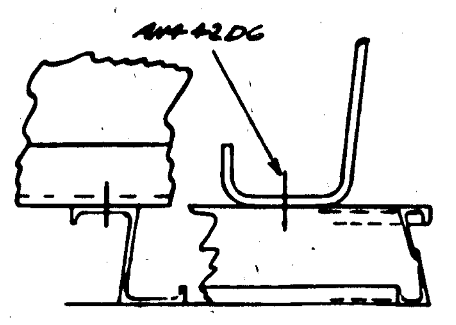

DETAIL B
SHOWING BOT. STRINGER ATT'N'T TO PRESSED B.F.'S WHERE NO CLIP IS USED

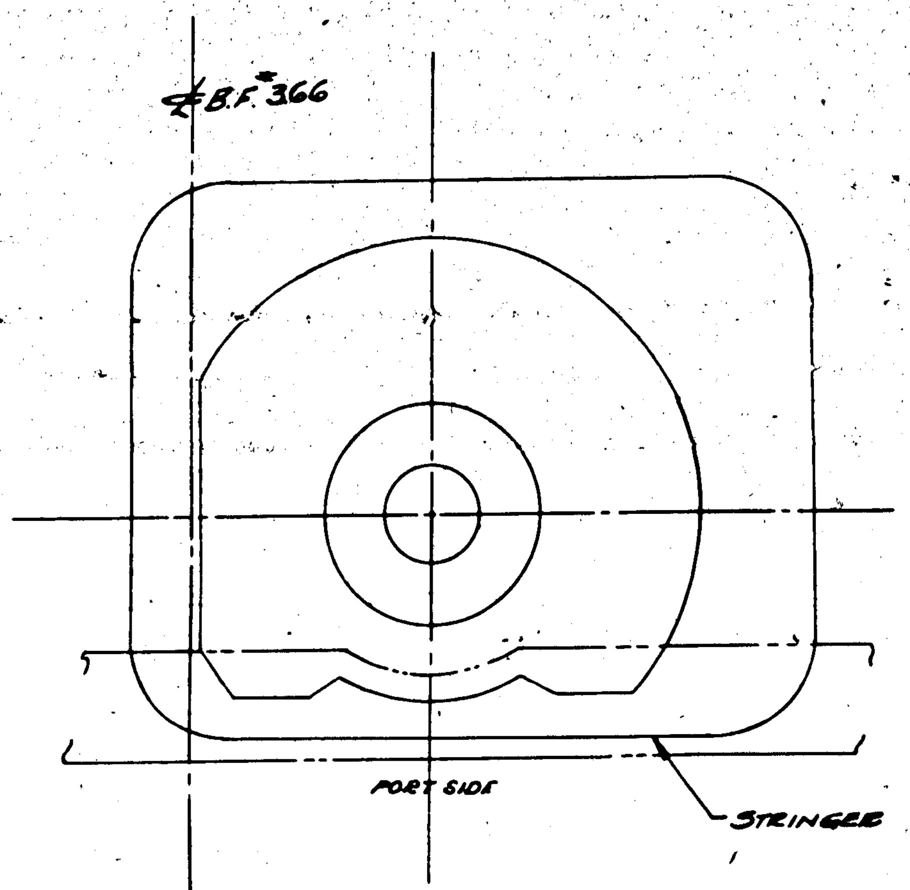

VIEW SHOWING CUTOUT FOR DRIFT SIGHT INSTALL ON PBY5 ONLY
SEE DWG. 28F5009 FOR LOCATION AND PARTS SECURED TO HULL
DETAIL C

SHEET #4 OF 4 SHEETS

PART NO.	STOCK	MATERIAL	SPEC.	-550	-645	-750	-755	-850	-855			ZONE
-640				1								
-639				1								
-638				1								
-637				1								
-636				1								
-635				1								

PARTS LIST PER ASSY

PART NO.	STOCK	MATERIAL	SPEC.	-550	-645	-750	-755	-850	-855
28B1000-39R	K13626 X (APPROX)			3	3	3	3	3	3
28B1000-39L	K13626 X (APPROX)			3	3	3	3	3	3
" " -35	.064 X [illegible]	ALCLAD	24ST-T	6	6	6	6	6	6
28B1000-[illegible]	.072 X [illegible]	ALCLAD	24ST-T	6	6	6	6	6	6
28B1000-[illegible]	.051 X 8 X 54	ALCLAD	24ST ANN T	1	1	1	1	1	1
28B5249-R				-	1	-			
28B5249-L				-	1	-			
28B5364-2				-	1	-			
28B5640-2				-	1	-	-	-	1
28B4126-4				-	1	-	-	1	1
28B1600-550				-	1	-			
28B5252-2								1	
28B5253-2								1	
28B5253								1	
28B5254								1	
28B5255								1	
28B5256								1	
28B1525-555				-	-	-	-	1	-
28B1715-550				1					
28B1006-100				1					
28B0165				1					
28B5250				-	-	-	-	-	1
28B1200-555				-	-	-	-	1	1
28B5100-3				-	-	-	-	-	-
28B2100-80				-	-	-	-	1	-
28A5228				-	-	-	-	1	1
28B1250-555				-	-	-	-	1	1
28B5200					1			1	1
28B1840-60					1				
28B056-550				1	-	1	-	1	-
28B045-550				1	-	1	-	1	-
28B043-550				1	-	1	-	1	-
28B023-550				1	-	1	-	1	-
28B019-550R				1	1	1	1	1	1
28B019-550L				1	1	1	1	1	1
28B5016				1	1	1	1	1	1
28B5017				1	1	1	1	1	1
28B5005				2	1	1	1	1	1
28B5680				-	1	-	1	-	1
28B5660				-	1	-	1	-	1
28B5640				-	1	-	1	-	1
28B5620				-	1	-	1	-	1
28B5575-T				-	1	-	1	-	1
28B5550				-	1	-	1	-	1
28B5525				-	1	-	1	-	-
28B5475				-	1	-	1	-	1
28B5450				-	1	-	1	-	1
28B5425				-	1	-	1	-	1
28B5366				-	1	-	1	-	1
28B5333				-	1	-	1	-	1
28B5250				-	1	-	1	-	-
28B067-555				-	1	-	1	-	1
28B056-555				-	1	-	1	-	1
28B045-555				-	1	-	1	-	1
28B043-555				-	1	-	1	-	1
28B023-555				-	1	-	1	-	1
28B5525-2				1	1	1	1	1	1
28B4115-2				1	1	1	1	1	1
28F5097				1					
28B3126-55				1	1	1	1	1	1
28B1000-800					2				
AN442-D6									
AN442-D5									
AN442-D4									
AN360-62				28	28	28	28	28	28
AN354-43				8	8	8	8	8	8
AN360-10				8	8	8	8	8	8
Q4305-06									
Q4305-05									
Q4305-04									
Q4305-03									
Q5161-K5-75				2	2	2	2	2	2
Q350-1				1	1	1	1	1	1
28B5161				-	-	-	-	1	1
28B4038				-	1	1	-	-	-
28B1550-5				-	-	-	-	1	-
28B2100-75				-	-	1	-	-	-
[illegible]				-	1	-	-	-	-
28B5100				-	1	-	-	-	-
28B1300-555				-	1	-	1	-	1
28B5200				-	1	1	-	-	-
28B4126-2				1	-	1	1	-	-
28B3491-1				1	1	1	1	-	-
28B3491				1	-	-	-	-	-
28B3110				1	1	1	1	1	1
28B3021				1	1	1	1	1	1
28B2650-55				1	1	1	1	1	1
28B2150-55				1	1	1	1	1	1
28B2143				1	1	1	1	1	1
28B2100-55				1	-	-	-	-	-
28B2040				1	1	1	1	1	1
28B2021-1				1	1	1	1	1	1
28B2021				1	1	1	1	1	1
28B2024-300				1	1	1	1	1	1
28B2019-55				1	1	1	1	1	1
28B2018				1	1	1	1	1	1
28B2017-0				1	1	1	1	1	1
28B2016-50				1	1	1	1	1	1
28B1955-1				1	1	1	1	1	1
28B1959				1	1	1	1	1	1
28B1950				1	1	1	1	1	1
28B1920				1	1	1	1	1	1
28B1900				1	1	1	1	1	1
28B1850-1				1	1	1	1	1	1
28B1890				1	1	1	1	1	1
28B1840-55				1	-	1	1	1	1
28B1800-55				1	-	1	1	1	1
28B1775				1	1	1	1	1	1
28B1725-55				1	1	1	1	1	1
28B1600-550				1	-	1	1	1	1
28B1518-7				1	1	1	1	1	1
28B1518				1	1	1	1	1	1
28B1515-550				1	-	1	-	1	-
28B1512				1	1	1	1	1	1
28B1510				1	1	1	1	1	1
28B1550-550				1	-	1	-	1	-
28B1527				1	1	1	1	1	1
28B1525-550				1	-	1	-	1	-
28B1500-550				1	-	1	-	1	-
28B1475-550				1	-	1	-	1	-
28B1450-550				1	-	1	-	1	-
28B1425-550				1	-	1	-	1	-
28B1400-550				1	-	1	-	1	-
28B1366-550				1	-	1	-	1	-
28B1333-550				1	-	1	-	1	-
28B1307-80				1	1	1	1	1	1
28B1300-550				1	-	1	-	1	-
28B1265-55				2	2	2	2	2	2
28B1250-550				1	-	1	-	1	-
28B1200-550				1	-	1	-	1	-
28B1186-11				1	1	1	1	1	1
28B1186-10				1	1	1	1	1	1
28B1166				1	1	1	1	1	1
28B1125-550				1	1	1	1	1	1
28B1100				1	1	1	1	1	1
28B1085-46				1	1	1	1	1	1

PARTS LIST PER ASSY

PART NO.	STOCK	MATERIAL	SPEC.	-550	-645	-750	-755	-850	-855
-33R	FOR MATERIAL SEE SHEET #3			1	1	1	1	1	1
-33L				1	1	1	1	1	1
-64R				1	1	1	1	1	1
[illegible]-64L				1	1	1	1	1	1
28B1089-1				1	1	1	1	1	1
28B1079				1	1	1	1	1	1
28B1066-66				1	1	1	1	1	1
28B1088-650				1	1	1	1	1	1
28B1088-65R				1	1	1	1	1	1
28B1088-65L				1	1	1	1	1	1
28B1086				1	1	1	1	1	1
28B1084-65				1	1	1	1	1	1
28B1081				1	1	1	1	1	1
28B1080-65				1	1	1	1	1	1
28B1005					1	1	1	1	1
28B866				1	1	1	1	1	1
28B820-65				1	1	1	1	1	1
28B720-65				1	1	1	1	1	1
28B700-60				1	1	1	1	1	1
28B680-650				1	-	1	-	1	-
28B660-65				1	-	1	-	1	-
28B640-650				1	-	1	-	1	-
28B620-65				1	-	1	-	1	-
28B343				1	1	1	1	1	1
28B255				1	1	1	1	1	1
28B088-65				1	1	1	1	1	1
28B087-65				1	1	1	1	1	1
28B086-55				1	1	1	1	1	1
28B085-65				1	1	1	1	1	1
28B084-10				1	1	1	1	1	1
-9				1	1	1	1	1	1
-8				1	1	1	1	1	1
-7				1	1	1	1	1	1
-6				1	1	1	1	1	1
-5				1	1	1	1	1	1
[illegible]				[illegible]					
[illegible]				[illegible]					
28B083-1				1	1	1	1	1	1
28B083				1	1	1	1	1	1
28B082-1				1	1	1	1	1	1
28B082				1	1	1	1	1	1
28B081-1				1	1	1	1	1	1
28B081				1	1	1	1	1	1
28B080-1				1	1	1	1	1	1
28B080				1	1	1	1	1	1
28B075				1	1	1	1	1	1
28B073				3	3	3	3	3	3
28B071				1	1	1	1	1	1
28B067-650				1	-	1	-	1	-
28B068				2	2	2	2	2	2
28B060-5				2	2	2	2	2	2
-4				2	2	2	2	2	2
-3				2	2	2	2	2	2
28B060-2				2	2	2	2	2	2
28B5037-6				2	2	2	2		
-7				2	2	2	2		
-8				2	2	2	2		
28B5032-9				2	2	2	2		
28B059-2				2	2	2	2	2	2
28B5032-15				2	2				
-16				2	2				
-17				2	2				
28B5032-14				2	2				
-388R				-	1	-	1	-	1
-388L				-	1	-	1	-	1
-387R				-	1	-	1	-	1
-387L				-	1	-	1	-	1
-386R				-	1	-	1	-	1
-386L				-	1	-	1	-	1
-385R				-	1	-	1	-	1
-385L				-	1	-	1	-	1
-384R				-	1	-	1	-	1
-384L				-	1	-	1	-	1
-383R	FOR MATERIALS SEE SHEET #3			-	1	-	1	-	1
-383L				-	1	-	1	-	1
-382R				1	1	1	1	1	1
-382L				1	1	1	1	1	1
-94R				1	1	1	1	1	1
-94L				1	1	1	1	1	1
-93R				1	1	1	1	1	1
-93L				1	1	1	1	1	1
-92R				1	1	1	1	1	1
-92L				1	1	1	1	1	1
-91R				1	1	1	1	1	1
-91L				1	1	1	1	1	1
-90R				1	1	1	1	1	1
-90L				1	1	1	1	1	1
-654	SEE SHEET #1			2	2	2	2	2	2
-653R				[illegible]					
-653L				[illegible]					
-553R				[illegible]					
-554				1	1	1	1	1	1
-553R	FOR MATERIAL SEE SHEET #3			[illegible]					
-632R				[illegible]					
-631R				[illegible]					
-100	FOR MATERIAL SEE SHEET #1			1	1	1	1	1	1
-88				1	1	1	1	1	1
-88	SEE MATERIAL & REQMTS SEE SHEET #3			1	1	1	1	1	1
-82				1	1	1	1	1	1
-79				1	1	1	1	1	1
-77				1	1	1	1	1	1
-73				2	2	2	2	2	2
-70				10	10	10	10	10	10
-72				2	2	2	2	2	2
-71				2	2	2	2	2	2
-64				8	8	8	8	8	8
-63				24	24	24	24	24	24
-62					2	2	2	2	2
-61	FOR MATERIALS SEE SHEET #1			1	1	1	1	1	1
-60				1	1	1	1	1	1
-45				1	1	1	1	1	1
-33				1	1	1	1	1	1
-31	FOR MATL & REQMTS SEE SHEET #2			1	1	1	1	1	1
-27				1	1	1	1	1	1
-23				1	1	1	1	1	1
-487R				1	1	1	1	1	1
-487L				1	1	1	1	1	1
-486R				1	1	1	1	1	1
-486L				1	1	1	1	1	1
-16				1	1	1	1	1	1
-15				1	1	1	1	1	1
-12R	FOR MATL SEE SHEET #3			1	-	1	-	1	-
-12L				1	-	1	-	1	-
-11R				1	-	1	-	1	-
-11L				1	-	1	-	1	-
-10R				1	-	1	-	1	-
-10L				1	-	1	-	1	-
-9	FOR MATL & REQMTS SEE SHEET #2			1	1	1	1	1	1
-7				1	1	1	1	1	1
-6				1	1	1	1	1	1
-4				1	1	1	1	1	1
-3				1	1	1	1	1	1
28B1000-2				1	1	1	1	1	1
				-550	-645	-750	-755	-850	-855

NOT FOR USE ON SHIPS #1 TO 8 OF 550 ASSY & #1 OF 750 & 850 ASSY'S (SEE -94, -93, & -4 NOTE BELOW)

-4 REPLACES 382 L&R -94 REPLACES -92 -93 & -94 & -93 REPLACES -90 & -91 ON SHIPS #1 THRU 8 OF 550 ASSY & SHIP #1 OF 750 & 850 ASSY

△ AS PER NEXT ASSY + CONT 70496

	MODEL	NEXT ASSY	
△	PBY-5A	28B6000	
△	28-5AMI	28B6000	
△	28-5AMC	28B6000	
△	PBY-5A	28B6000	
△	PBY-5 R-[illegible]	28B6000	
555	28-5MI	28Z1025	1
555	28-5MA	28Z1025	1
555	28-5MC	28Z1025	1
[illegible]	28-5ME [illegible]	28Z1025	1
[illegible]	[illegible]		1
-755	28-[illegible]		1
-750	28-[illegible]		1
-855	PBY-6A [illegible]		1
-850	PBY-6A [illegible]	28Z1025	1

REQUIREMENTS FOR AIRPLANE

REPLACED BY

Z	SEE SHEET #1				

BILL OF MATL. FOR STRUCT ASSY -550, -655, -750, -755, -850 & -855 [illegible] PLATING

SHEET #4

J 28B1000

R

H 69